Creo 051



MDF
Panel size:
1200x3000 mm
Thickness max. 20 mm
Machining step:
L. 600 mm
H. 600 mm
Rotatable 90°
Machining depth:
max. 11 mm

www.creo-effetredesign.com

creo

by Effetre Design
Via Torino, 53/55
Cerro Maggiore-MI

Tel. +39 0331-45.49.04
info@effetredesign.com
www.effetredesign.com

SISTEMA DI FISSAGGIO - PANELS MOUNTING SYSTEM

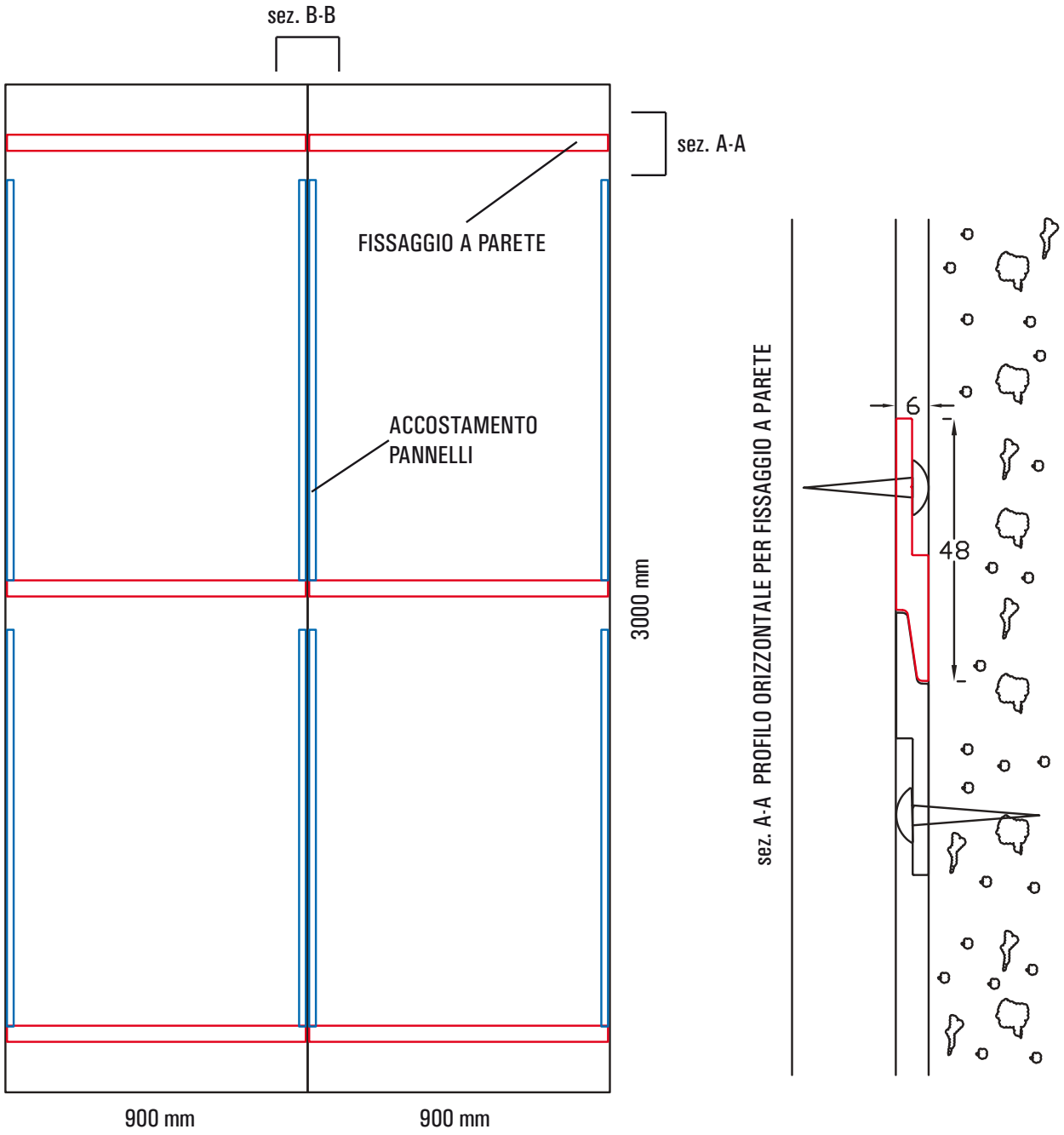

sez. B-B PROFILI VERTICALI PER ACCOSTAMENTO PANNELLI

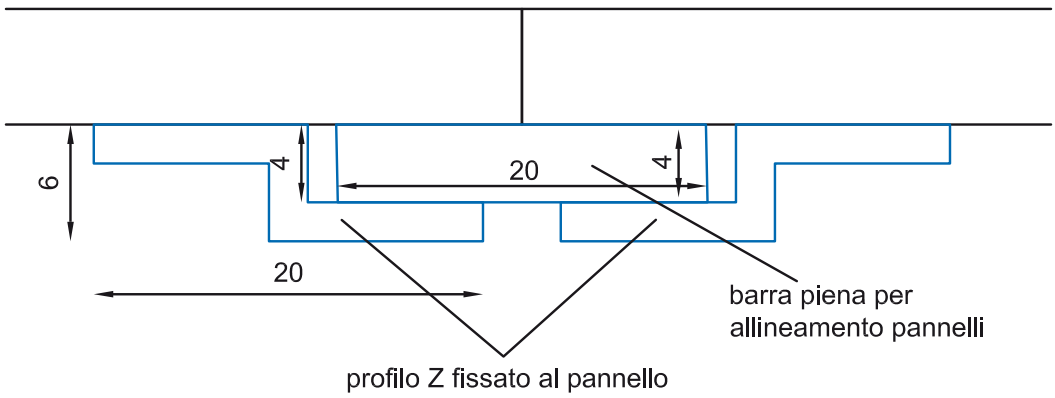

www.creo-effetredesign.com

creo
by Effetre Design
Via Torino, 53/55
Cerro Maggiore-MI
Tel. +39 0331-45.49.04
info@effetredesign.com
www.effetredesign.com