Creo 052



MDF
Panel size:
900x3000 - 1200x3000 mm
Thickness max. 32 mm
Machining step:
L. 1200 mm
H. 900 mm
Rotatable 90°
Machining depth:
max. 25 mm

* continuous panels only when put beside along the 300cm side

www.creo-effetredesign.com

creo

by Effetre Design
Via Torino, 53/55
Cerro Maggiore-MI

Tel. +39 0331-45.49.04
info@effetredesign.com
www.effetredesign.com

SISTEMA DI FISSAGGIO - PANELS MOUNTING SYSTEM

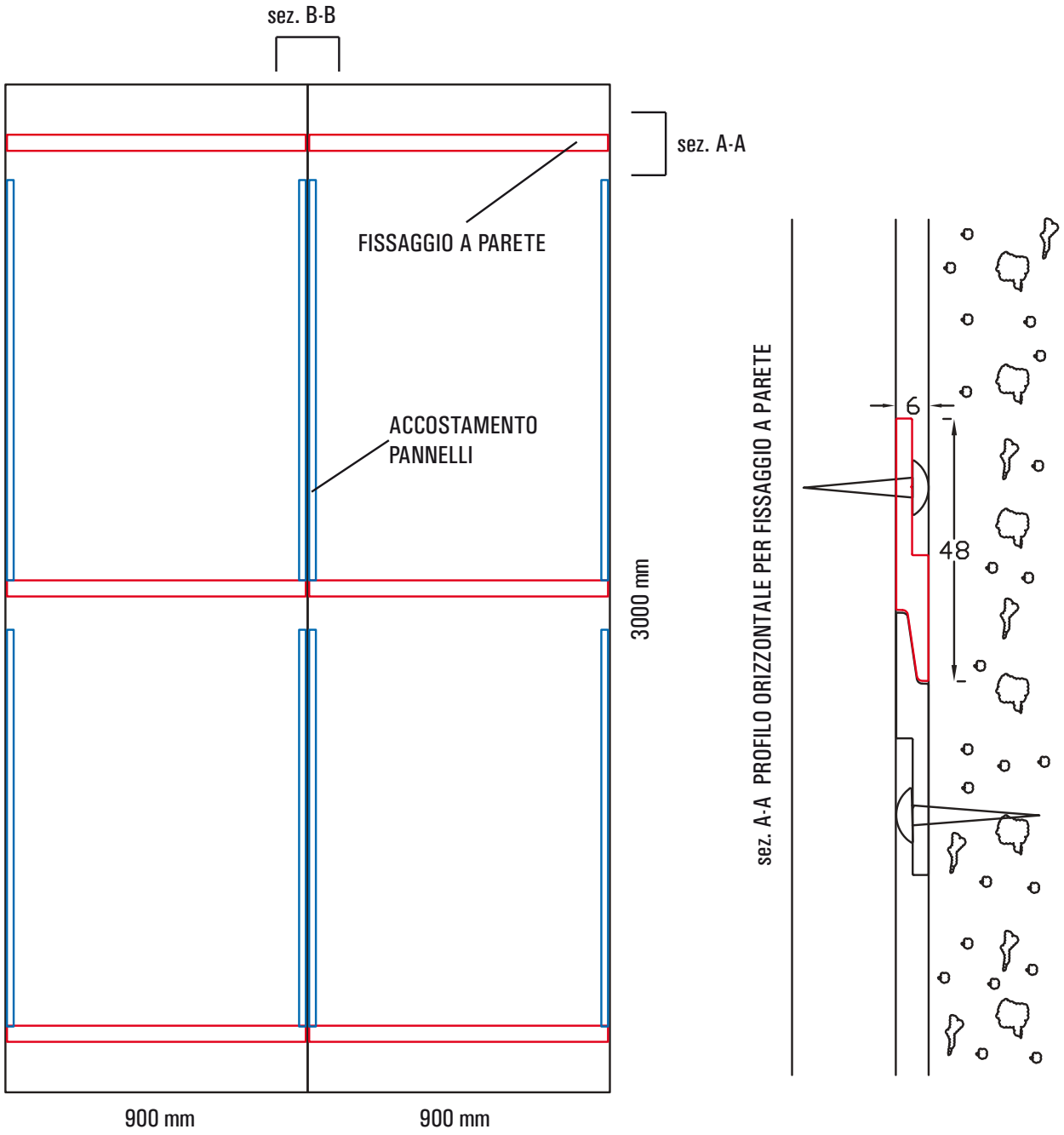

sez. B-B PROFILI VERTICALI PER ACCOSTAMENTO PANNELLI

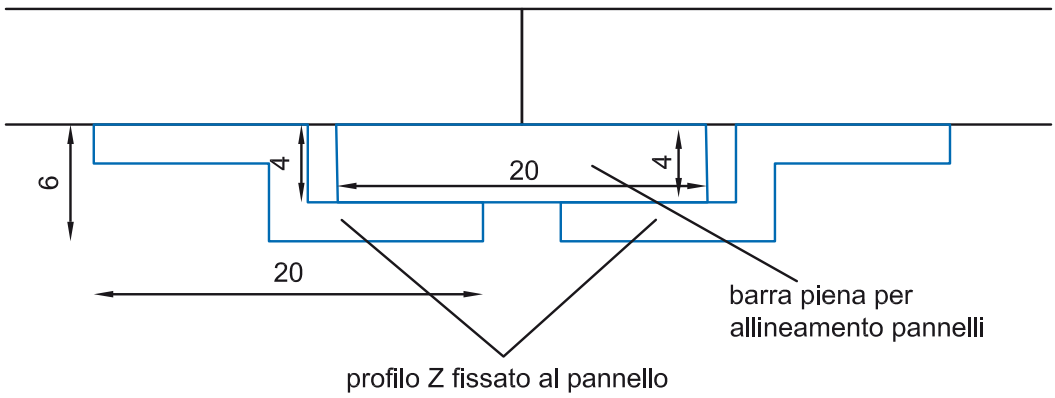

www.creo-effetredesign.com

creo
by Effetre Design
Via Torino, 53/55
Cerro Maggiore-MI
Tel. +39 0331-45.49.04
info@effetredesign.com
www.effetredesign.com